AFB 30 x 30 x 10 MM SERIES



* Bearing Type
  Ball Bearings
* Material
  Impeller & Frame : Plastic (UL 94V-0)
* Lead Wires :
  UL 1061 AWG #26 OR Equivalent
  Red Wire Positive (+)
  Black Wire Negative (-)
* Weight : 10.5g (0.37 oz)
* Rib Type Only

DIMENSIONS DRAWING

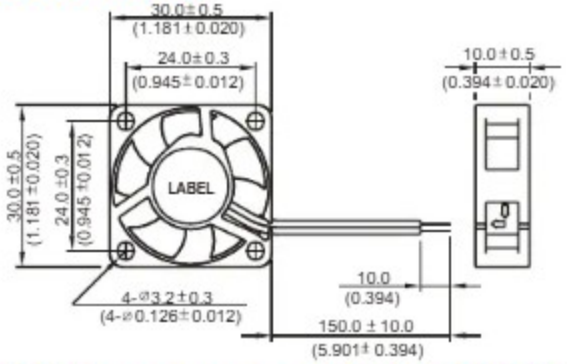

P & Q CURVE (AT RATED VOLTAGE)

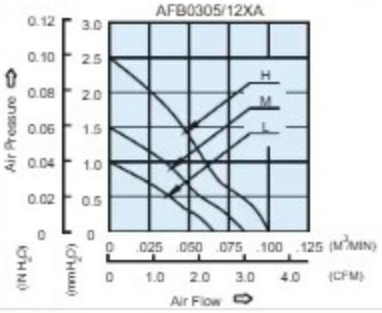

MOUNTING PANEL CUTOUT

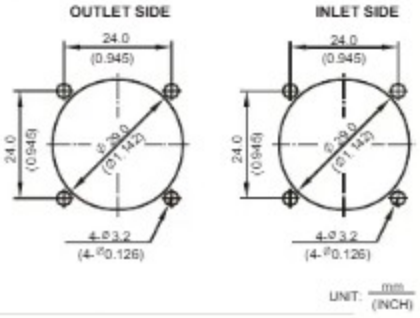

MODEL		Rated Voltage	Operating Voltage Range	Rated Current	Rated Input Power	Speed	Maximum Air Flow		Maximum Air Pressure		Noise
PART NO.	FUNCTION	VDC	VDC	Amp	Watt	R.P.M.	m^3/min	CFM	mmH_2O	$IN\ H_2O$	dB-A
AFB0305LA	-R00 / -F00	5	4.0 to 6.0	0.07	0.35	6000	0.067	2.37	1.00	0.040	17.5
AFB0312LA	-R00 / -F00	12	9.5 to 13.8	0.05	0.60						
AFB0305MA	-R00 / -F00	5	4.0 to 6.0	0.11	0.55	7500	0.085	3.00	1.50	0.060	20.0
AFB0312MA	-R00 / -F00	12	9.5 to 13.8	0.07	0.84						
AFB0305HA	-R00 / -F00	5	4.0 to 6.0	0.16	0.80	9000	0.100	3.53	2.50	0.100	25.0
AFB0312HA	-R00 / -F00	12	9.5 to 13.8	0.09	1.08						

* Function type is optional.
* The max. air flow and the speed are measured in free air ; max. air pressure is measured at zero air flow.
* Noise is measured in anechoic chamber in free air, one meter from intake side.
* All readings are typical values at rated voltage.
* Specifications are subject to change without notice.